CNC Technology

CNC Expert

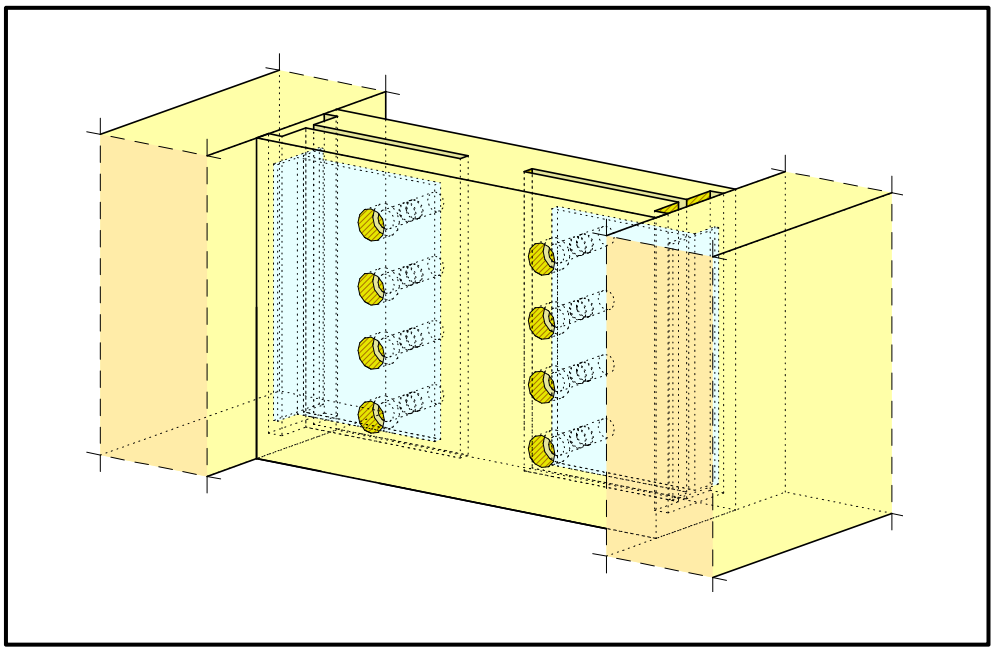

Development of a collection of reference materials containing course templates and course materials with the goal to include the latest CNC technology in the area of Wood Building & Construction

Establishment of a Centre of Competence for the Carpenter and Wood Building Profession through extension of the Centre for Carpenters in Kassel, Germany

BUNDESBILDUNGSZENTRUM DES ZIMMERER- UND AUSBAUGEWERBES bubiza.de
Berufsförderungswerk des Hessischen Zimmerhandwerks e. V.
supported by: BIBB BAFA

Aggregates and cutting applications of the fully automated joinery machine:

Based on space and cost considerations, the K2+ used for training purposes has been equipped with the most important aggregates only. Therefore, we want to introduce additional aggregates and machining processes.

Layout

In most companies that combine a automated joinery machine and a planer the layout is U-shaped. This concept has the advantage of short distances between processing steps. The completed work pieces leave the planer close to the operator's console. Therefore, the operator is able to feed timbers into the joinery machine and the planer and to subsequently package the work pieces.

Some companies make a point of machining the rafters and purlin profiles with the planer first. With a U-shaped layout the profiled ends have to be at the back of the joinery machine (planed at the back). Other companies prefer to place the back end of a work piece (higher surface quality required) closer to the operator to make sorting the easier (planed in the front). The worst case scenario for a piece planed at the back is for example that a rafter is processed and only during the eaves cut it is noticed that the piece is too short or shows tear out. In this case the whole work piece would need to be re-done. Would the same scenario occur with a work piece planed in the front, the incorrect cut which caused the slight shortage would be in an area that is not visible and therefore, could be tolerated.

Even work pieces that have been pre-planed are fed through the planer (without further processing) in order to eject the work piece close to the operator.

The difference between the K3i and K2 models is the third positioning wagon already transports the next work piece to the saw for saw cuts at the front while simultaneously the two right hand side positioning wagons hold the current work piece in place. This overlap in processing steps leads to faster machining of the timber.

Loading of timber

The standard model may lead to damaged components when unstacking the timber in the upper layers. Due to the height the raw material can be damaged when falling onto the floor. This risk can be minimized with support brackets that can be adjusted in height.

An automated unstacking process preserves the operator's strength.

Industrial production uses an automated feeding process via a crane directly from the raw material storage („Pick and Feed“).

Measuring of the beam

An optional accessory - a laser beam - measures the length of the beam before it is fed into the machine. If the machine is not equipped with this tool, the operator measures the beam by transporting it past a zero set beam which measures the exact length. This step however, adds to the overall processing time.

Has the work piece already been trimmed at a right angle, the cut on the right hand side can be omitted. In that case the work piece is transported to the zero set beam and is measured exactly.

Positioning wagon

Compared to previous models, the positioning wagons of the K2-/K3 models cause a lot less damage to the work pieces. It is also possible to upgrade the machine with rubber pads instead of corrugated pads to minimize transport damage to the work piece.

Even logs can be machined. Caution! If the diameter is too large the feeding clamps or rotator may not be able to grab the piece properly as the clamps can't reach the top of the log. Therefore, chose a work piece position that does not require rotations if the log is too large.

TJI beams can be perfectly clamped by the positioning wagons.

Range of width of timbers to be clamped: 52mm to 525mm.

Range of height of timbers to be clamped: 20mm to 300mm

The PW´s can be modified to be able to clamp large dimensioned timbers up to a maximum width of 625 mm

Maximum width of a work piece: 450 mm

Optional: Maximum Width: 900 mm

Optional: Maximum Width 1250

Therefore, the smallest cross-section for a rotation is 50x50 mm and the largest is 300x300 mm.

Saw

The saw can be rotated 360° and tilted from 0 to 65°.

All work pieces require a trim cut in the front and back end to ensure that the work piece has been separated completely from waste pieces. Some processes include the trim cut e.g. cutting tenons and therefore, the trim cut does not have to be programmed.

The saw can only cut from the bottom. To process the „witches cut“ shown in the picture on the right two rotations of the work piece are necessary.

Long saw cuts are processed by turning the saw to the desired angle and then the positioning wagons transport the work piece lengths wise through the saw.

The saw is also used to cut grooves across the grain (several cuts) that are too wide for the end mill.

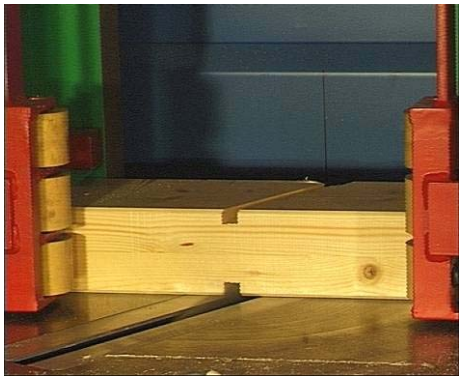

Chamfers and grooves can be processed with the saw or the universal mill. The universal mill is the standard equipment used. If during this process the machine shows the message “No clamping points found near process” it is recommended to switch the tool from „automatic” to “saw”.

Another machine option is seen on the right hand side – a hatch which has been integrated into the door. The hatch opens automatically when small work pieces are ejected and can be emptied from the outside without stopping the machine.

Universal Mill (UM)

An important difference between the K2 and K3 models is the design of the universal Mill which is available in a 4-axis or a more expensive 5-axis version. The difference is often made apparent when processing an extremely complex work piece. The 5-axis machine is able to mill a dove tail connection for a “jack rafter joint” while the 4-axis machine can’t process this work piece as the UM can’t tilt as required. However, even if a company decides that such a complex work piece will not need to be processed, it should be considered, that while both models in general can execute the same processes, the 4-axis model may require additional steps and rotations of the work piece. Below is the chamfering process shown. While the 4-axis machine through concurrent transport along the x and y axis processes

a strip as wide as the end mill, the 5-axis machine tilts the mill to the programmed angle and the positioning wagons move the work piece along the x-axis past the mill head. The difference in processing time is enormous. It can be argued that the angle of the tilt can be incorrect and therefore, the 4-axis machine can produce better results as there won't be production errors caused by inaccuracies with the tilt.

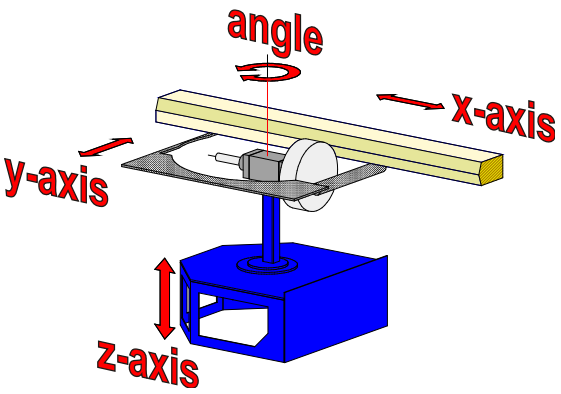

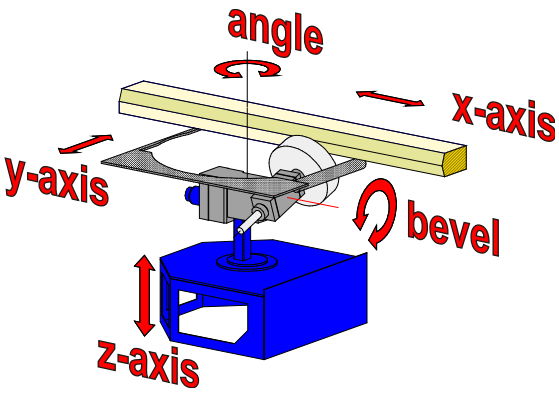

The decision which version of the machine is being purchased cannot be adjourned. A 4-axis machine cannot be upgraded to a 5-axis machine as this requires more space. It is possible to combine the advantages of both versions by purchasing both aggregates if the company cannot decide between the versions. Inserts for mills of various sizes offer great flexibility.

Milling Cutter

(Standard: Ø 350 mm, B = 100 mm) equipped with multiple insert and scoring knives for tenons, recesses etc. Tenons are processed with a round shape as the mortises are produced with the end mill. The operator is responsible for the correct fit of the tenons and mortises. The settings in the office PC are not transferred with the job to the machine. This requires an arrangement with the operator. To ensure that the tenons can be assembled easily, select the option "chamfer". This will produce a bevel on two edges of the tenon (by the end mill).

The milling cutter is also being used for longitudinal chamfers.

Due to the large diameter the milling cutter reaches a high cutting speed and achieves an excellent processing quality.

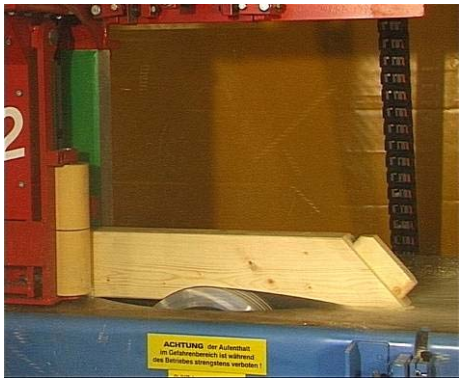

To avoid tear out in visible areas, select the option *"Splinter-Free: yes"*

Dovetail cutter

(Standard: Ø 30 / 60 mm)

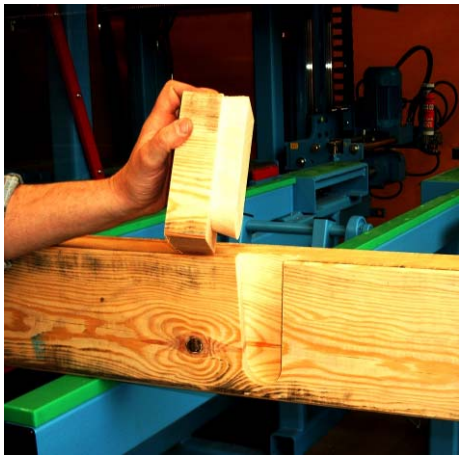

The discovery and customization of the dovetail joint for joinery using CNC programming has lead to remarkable innovations in the area of wood to wood connections. The engineer has to consider a possible weakening of the main beam and the supporting beams and increase the cross sections if necessary. Compared to connection materials such as metal the dovetail joint offers great advantages particularly in the visible areas of the work piece as this method does not require any additional corrections or finishing after assembly. If the load-bearing capacity of the dovetail joint is not sufficient diagonally inserted bolts can be used to reach the required capacity.

To achieve a correct fit for the dovetail joint (tight/loose fit) the operator should process sample pieces. The settings in the office PC are not transferred with the job to the machine. This requires an arrangement with the operator.

Diameter: 60mm at the front edge, 45mm at the base.

Length: 28mm

Dove tail cutters with exchangeable knives offer several advantages: The geometry of the tool doesn't change as a result of sharpening, independence from a sharpening service and a good surface quality.

End Mill (EM)

(Standard: Diameter: 40mm Length: 160mm)

The end mill is used for processing smaller joints that cannot be processed using the large UM-head e.g. mortises, grooves, lap joints). It can also be used to drill holes at any angle. The processing quality of the standard end mill is less accurate than the universal mill as it has the same revolutions per minute (rpm) as the milling cutter, however, it has a smaller diameter and therefore, a lower cutting speed. Whenever possible use the Universal Mill in order to protect the end mill from overload and to ensure a good surface quality. To avoid big forces perpendicular to the axis of the end mill it is recommended to remove the bulk of the material using the UM and then clean up the surface of the final contour using the EM.

Newer versions of end mills with exchangeable knives do not change their geometry as a result of sharpening.

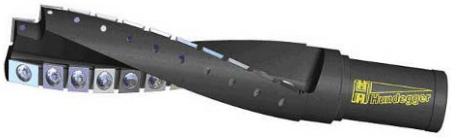

The picture on the right shows the drilling process for a connector.

The end mill of a 5-axis UM is also able to process mortises that are not at a right angle to the edges of the work piece.

The 4-axis model is not able to process a bird's mouth hip rafter at a right angle (rounded corner only). It is necessary to manually rework the corner as shown in the picture.

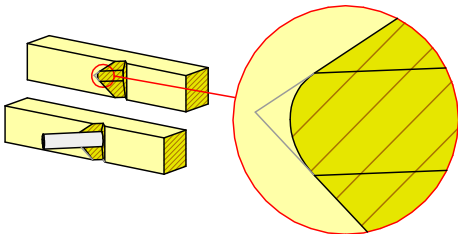

By choosing the option „recess“ the end mill processes a curve that includes the corner and therefore, the assembly is possible without manual correction.

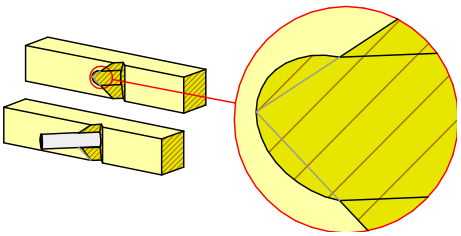

The option described above is not recommended for visible roof structures as demonstrated by the picture on the right. The hip rafter joint has a gap which is not acceptable in visible areas.

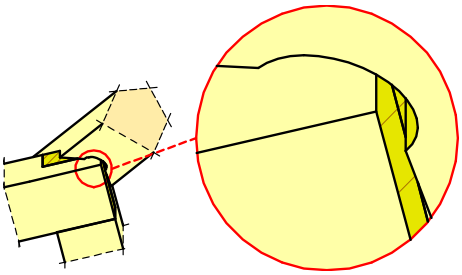

The 5-axis model is a lot more flexible in the processing of a bird's mouth hip rafter. Bird's mouth hip rafters that are at a right angle can be processed without any manual rework. The pictures 1 - 4 show the processing steps and on the right hand side the intermediate results are shown.

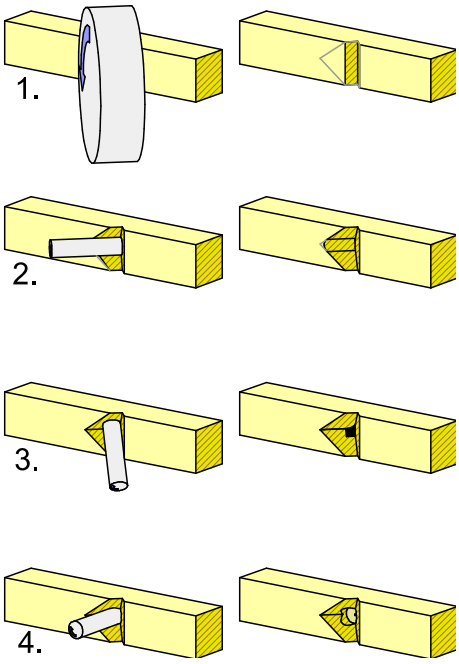

The end mill is a very flexible tool which can be used to process a variety of wooden joints. The picture on the right hand side shows a connection in the way it would be produced manually. The upper piece is shown with one rotation tot he right.

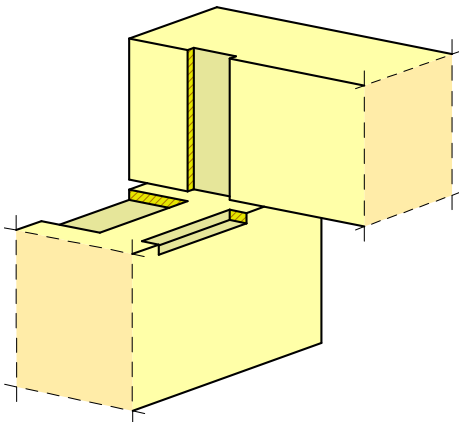

The second picture shows how the joint would be created by a CAD program and processed with an automated joinery machine. Due to the fact that the end mill is round, the notching won't have sharp corners. The work piece on the bottom needs to be reworked manually, to allow for a perfect fit at the construction side.

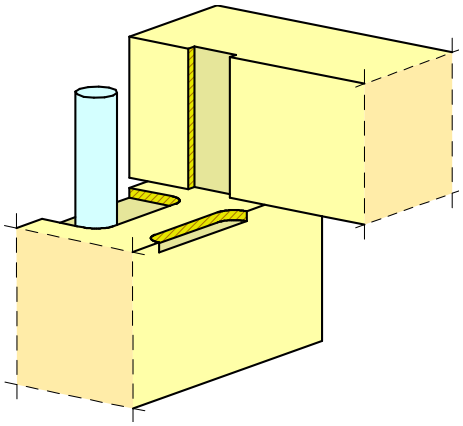

The third picture shows an alternative which used the "Relief Cut" option in the SPCP. The joint can be easily assembled without the need for manual rework, however, compared to the joint produced manually this version is considerably weaker. The "Relief Cut" command is available for several types of jobs, however, as there is no picture of the processing steps shown in the SPCP, it is difficult to judge in advance, whether the connection will be (compromised).

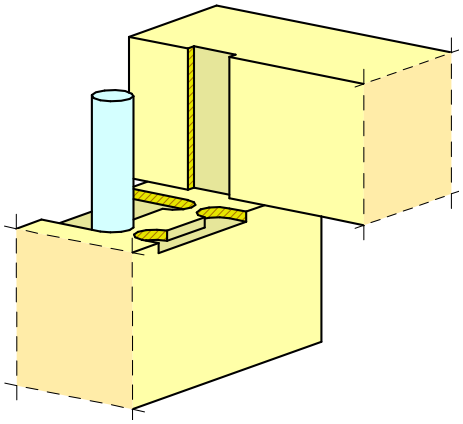

The fourth picture shows the optimum solution for the use of an automated joinery machine. The connections not compromised and there is no manual rework necessary. Unfortunately, this option is not supported by most CAD programs yet.

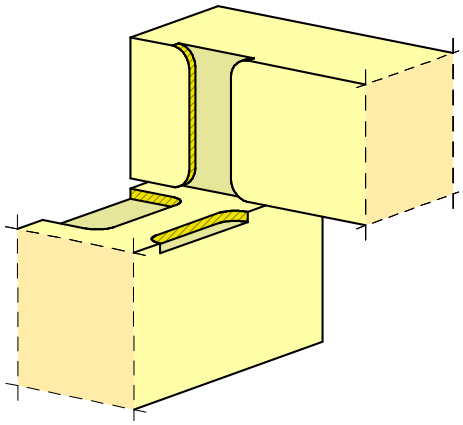

Shown below is a modification of a traditional joint that is used in timber frame construction. It is called a hidden corner lap joint which can withstand tensile forces. When adjusting to the possibilities of an automated joinery machine a main consideration is the radius of the end mill. In cases where the end mill produces only a curve, the counter piece needs to be processed with an identical curve.

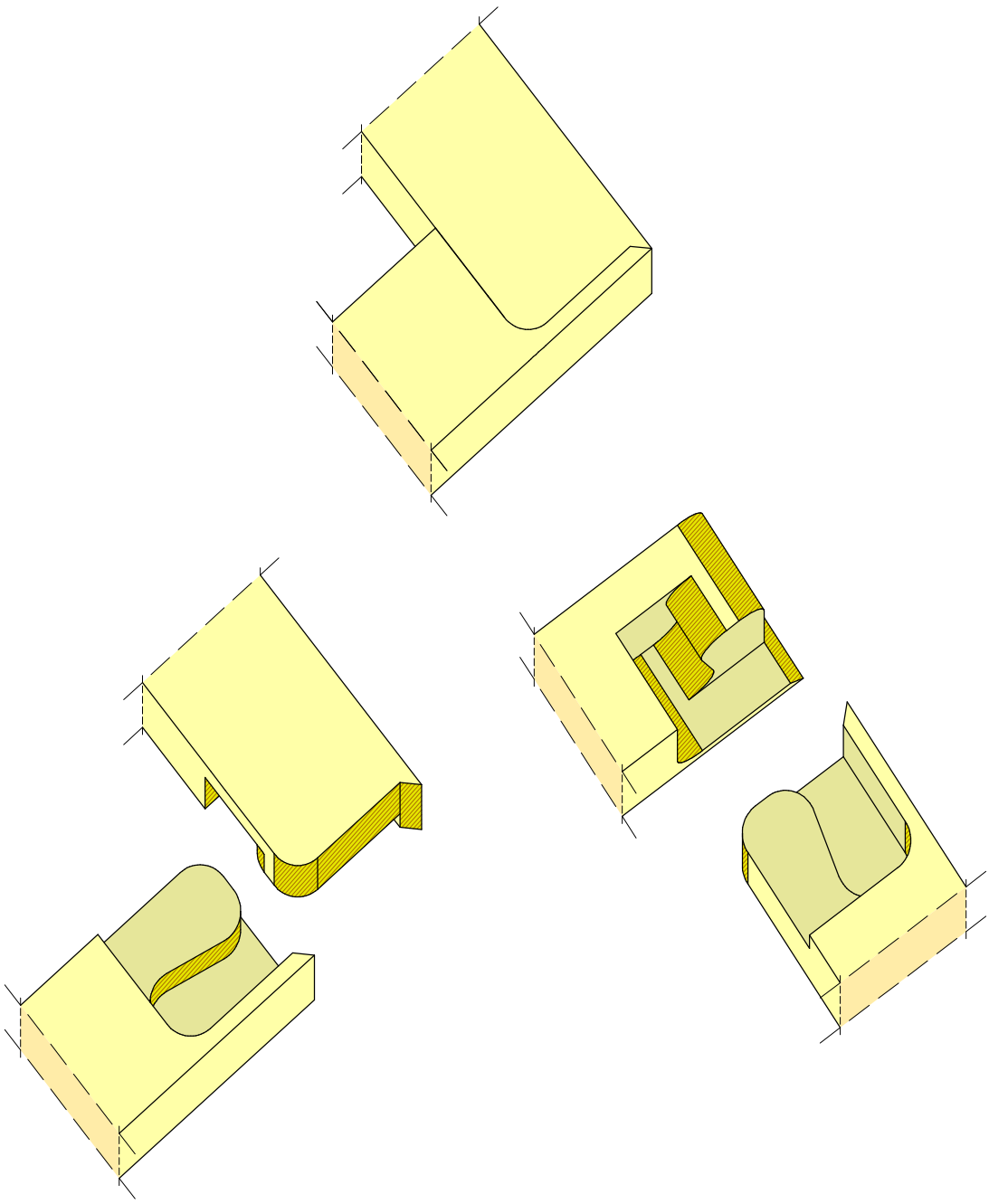

Marker

The marker is positioned at the Universal Mill table and scores the beams at a right angle e.g. for rafters and important connection points on purlins. It is recommended to use the marker on both sides to avoid confusion at the construction side.

Labelling device

The labelling device is positioned below the machine table of the UM. By moving the machine table sideways and simultaneously moving the timber lengthwise along the table letters and numbers can be written on the beam. The device is used to mark the work pieces with numbers and for complex constructions also to mark the corresponding numbers of the connection surface. Since this is a slow process it should only be used when necessary.

The numbering of the work piece can only be printed lengths wise onto the timber.

The labelling device was used to produce the angled markings for the necessary cuts on the shown frame of a specialty joint called “bat dormer”.

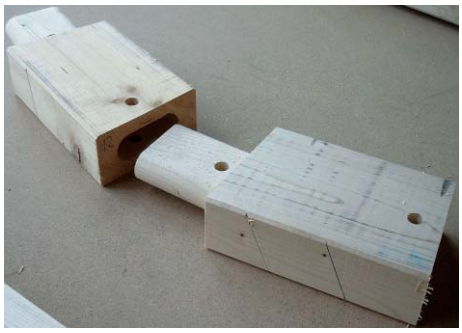

Without the angled markings it would have been difficult to align the various components resting on top of the dormer window.

Vertical Support

A vertical support can contain between four and five aggregates for vertical processing.

Drilling Unit

The machine operator has to switch drills less frequently if more drilling units are available.

Dovetail Cutter, End Mill

These tools are generally already included in the universal mill. This begs the question why should a company equip the machine with additional tools and aggregates? The additional units spread the processing to more aggregates which in turn extends the lifespan of the tools and increases the interval between required maintenance such as sharpening. Also the tools included in the supports offer high precision processing as the tilt and angles can't shift and therefore, do not need to be readjusted.

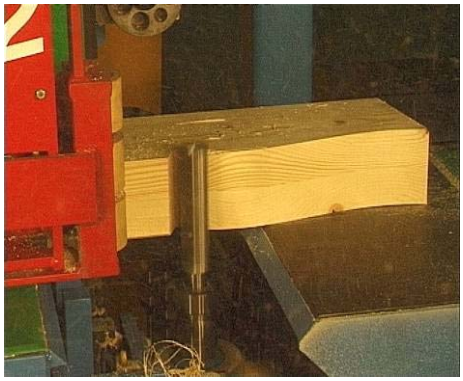

Vertical Slot Cutter

The vertical slot cutter can be very beneficial when processing work pieces that are weakened by the removal of material in the middle of the work piece and therefore, during assembly or transport could be damaged easily (drawings a and b). This is the case for cross members in log homes as those have large openings for windows and doors which can break easily. This risk can be minimized by cutting a longitudinal slot along the grain (drawing c). The cross section mainly remains in that case and therefore increases the strength of the work piece. The two missing trim cuts are usually done at the construction side (drawing d).

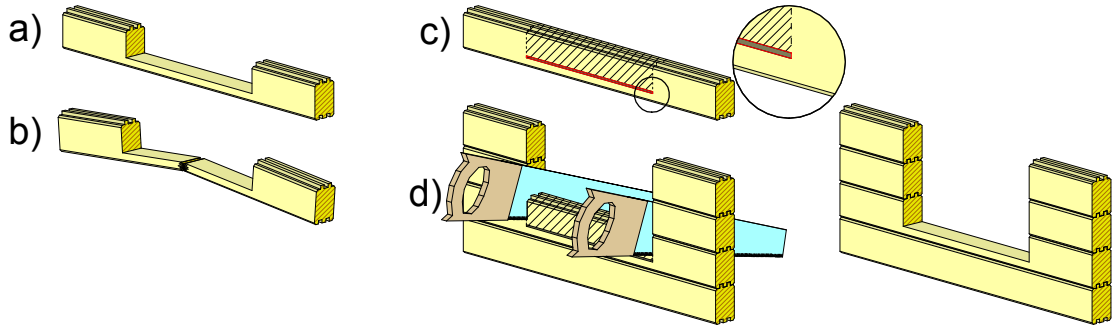

Horizontal Slot Saw

Narrow slots can only be produced by the horizontal slot saw. It is beneficial to use this aggregate since it can machine slots by moving in the y direction not overshooting the target length.

Horizontal Support

Drill Unit

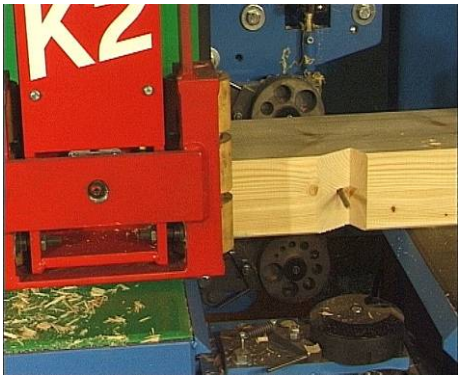

A drill unit which has been integrated in the horizontal support is mainly used for drilling holes for rafter nails. In the drawing on the right the bird's mouth faces the operator. If turned to the fence, the thin drill would meet an angled surface and therefore, would be deflected slightly (picture below). The increased friction would cause the drill to warm up and therefore, would become brittle and fracture faster. Companies that produce roofs sometimes require that the rafter nail drilling is not entirely continuous to avoid that connection pieces that have been inserted before the transport with the crane do not slide through and complicate the assembly. This can be entered in the machine data (d) → *Operations.* Important is the setting at the operator console. Settings contained in the office PC will not be transferred with the job.

The picture on the right shows how the rafter nail drill hole is placed in relation to the bird's mouth. The first principle is the placement in the centre of the bird's mouth. This will ensure that the drill hole is placed exactly in the corner of the bird's mouth (45 degrees). To ensure that the drill hole is placed closely to the corner of the bird's mouth when producing extremely steep or flat roof angles, select in the → *Machine Data (d)* → *Tools* the "Length offset for rafter drill" with a value for the upper and lower limit. In our example the lower limit is "-2" i.e. the value is measured along the vertical shoulder of the bird's mouth. The upper limit has been entered as "4". Positive values are measured along the horizontal shoulder of the bird's mouth. For the shown 30 degree bird's mouth the length offset is not important as the drill hole could be placed within the programmed limits.

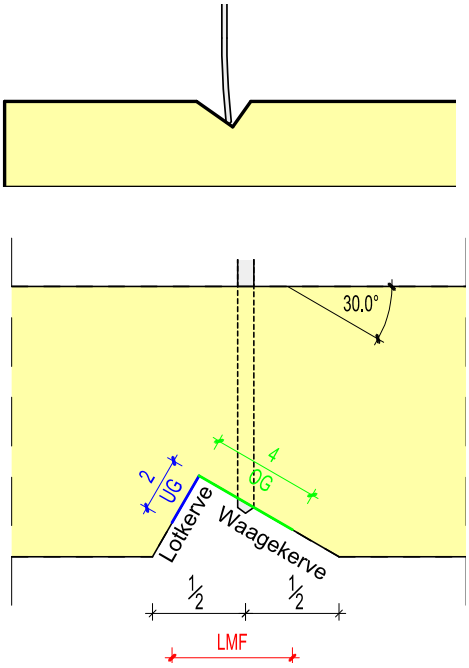

In the next sample the drill hole could not be placed centered as the middle of the bird's mouth is placed outside the length offset. Instead, the drilling is placed at the programmed lower limit.

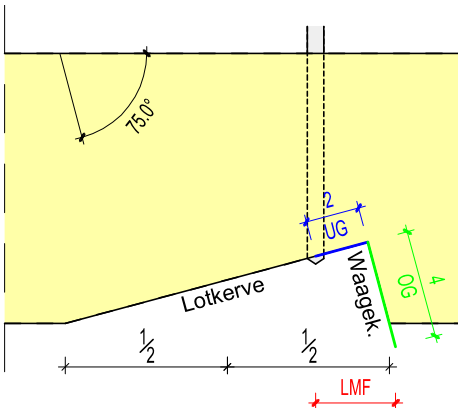

Following those principles, the placement of drill holes can be determined precisely. Again, the machine data at the operator console is essential. If the engineer requires a certain setting, the operator has to be informed and the requested changes have to be made in his machine data. The drawing on the right shows a placement of the rafter nail drill hole that is disadvantageous. What type of setting was used? How could the settings be changed to achieve a better placement?

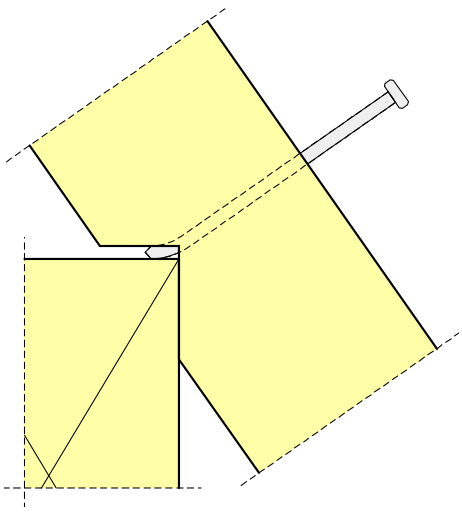

The drawing on the right shows the results of 5 different settings of the “length offset for rafter drill” option. Name the minimum and maximum values of each version.

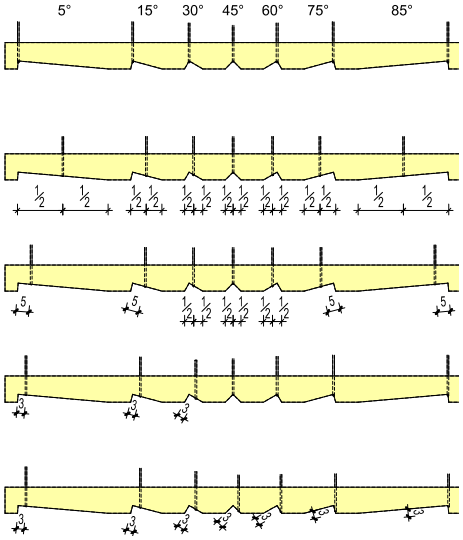

Horizontally swayable drilling assembly

This tiltable drilling assembly can sway horizontally between 90° and 45°.

Horizontal drill support from the front

A joinery machine with the standard aggregates requires two rotations for splinter free drilling as processing occurs from the same side. Machines that are equipped with a horizontal drill support from the front do not require any rotations. The drill on the fence side processes the first drill hole (half the depth of the work piece). As soon as the drill is pulled out the process is repeated from the other side.

Slot cutter

The slot cutter creates slots along the timber. Slots are only possible at the side faces and cannot be cut directly into the end grain without affecting the side of the timber.

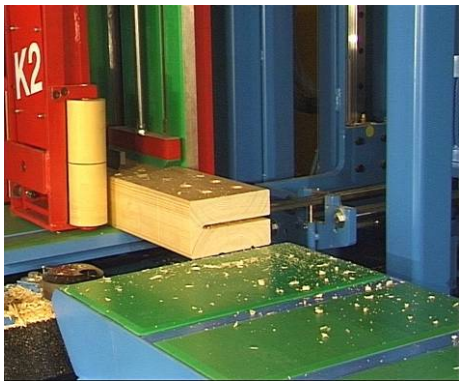

The round shape of the sword causes more waste at the bottom of the slot (drawing on the right). The setting in the machine data can be changed which causes the work piece to be moved by half a cut width and results in an overall increased cutting depth (drawing below). The change has to be discussed with the machine operator as the setting in the office PC is not transferred with the job.

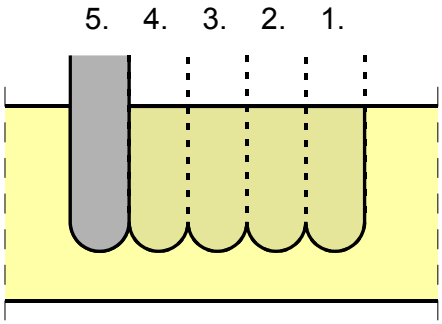

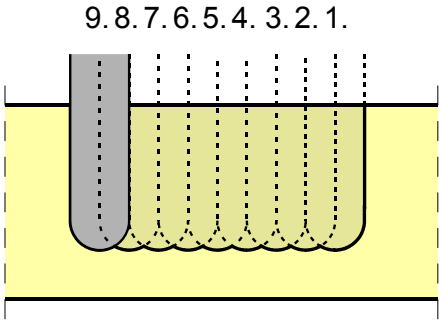

Guided Slot Cutter

When processing deep slots with narrow swords knots can deflect the sword. In the worst case scenario the slot is not usable. In this situation the guided slot cutter can be used. After the first cut has been executed, the sword is clamped at the operator side and fixated. Then the work piece is moved along the x-axis by the positioning wagons which minimizes the deflection of the sword by knots. When cutting slots at the front or back end of the work piece the sword can be fixated before touching the work piece. Hidden slots are not possible when this method is used. If a hidden slot is required, a groove on the operator side should be processed with the end mill. The groove should be slightly wider than the slot to achieve clean edges in which a wooden spline can be glued in.

Groove Cutter

This tool processes the work piece from above and below and therefore, eliminates the need for rotations.

Ink Jet Printer

The ink jet printer (the picture on the left shows the current model, the picture on the right shows a previous model) is capable of printing letters and numbers as well as bar codes onto the beam. The ink jet printer labels the beam faster than the labelling device. The device can be used to mark the connecting pieces for complex construction projects. While the ink jet printer is faster than the labelling the pieces it still adds to the production time and should be used for work pieces only that may be assembled incorrectly. There is an option to attach the ink jet printer from the bottom.

Labelling printer

This optional device can be attached to the operator console and prints labels for the completed work pieces. The labelling printer is capable of printing small paper labels containing information or bar codes that can be attached to the components. The operator can use a stapler to position the label on any other spot on the completed work piece.

Label stapler

The device is positioned behind the planer and automatically staples the labels printed by the label printer onto the end grain of the beams. The advantage of the label stapler compared to marking the work pieces lengths wise is that the required pieces can be found very easily at the construction side without opening the packages. A disadvantage could be that the labels are attached to a spot that is meant for finishing and therefore, the label may need to be removed.

End mill from above

The picture on the right shows an end mill installed from above which is very rare. This aggregate may eliminate a large number of rotations.

Vertically swayable slot cutter(180 degrees)

This is an extension of the aggregate mentioned above. Large openings can be processed more efficiently than before.

Universal Slot Cutter

With the universal slot cutter hidden slots in the end grain are possible. Also possible are angled slots for diagonal gusset plate connections as designed by engineers.

Tool Changer

Even if the machine is generously equipped with aggregates, it may happen that not enough slots are available for the required tools when processing a complex work piece. During processing a tool change by the operator is not possible as changes in the machine data are only captured for the following work piece. The tool changer however, allows the changing of up to 10 tools in a 5-axis aggregate during processing of a work piece

Turret

The turret contains permanently four tools that do not need to be changed. The tool pointing left is a drill for special dowels.

Multi Drill Unit

This device can be used to drill multiple vertical or horizontal holes simultaneously. When using the horizontal multi drill insert a principle taken from manual production applies. On the side opposite the drill holes wooden pieces have been mounted as backer blocks to ensure that the drill holes are splinter free.

Rotator

Rotations are unproductive processing steps during which no machining is executed. Complex work pieces however often require rotations. Therefore, the goal during process planning is to avoid rotations whenever possible by determining the optimal position of the work piece at the beginning of processing. Select *Part* → *Optimise part position*. This feature is used to automatically optimise the start position for the entire job.

Additional notes for optimizing a job

The direct entry of a job in the SPCP is good practice and develops imagination however, is rather the exception in the day-to-day work of the machine operator. The principal duty is to create construction projects using CAD programs and to amend those using the SPCP. Therefore, the optimization of projects created in a CAD program should be practised. In order to do so the instructor should provide sample construction projects which have been created with specific problems. To allow the course participants a first impression, they should be provided with a 3D presentation and a top view. Following please find important strategies for optimization.

Optimize part position

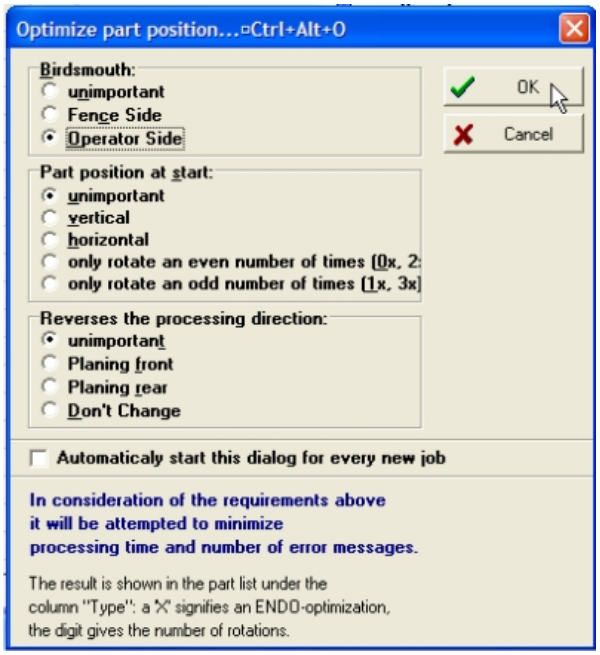

First open the automatic optimize part position window for the job which decreases the number of time consuming rotations. The dialog window contains options for different settings. With regard to the direction of the bird's mouth the operator side is the most frequent selection. In rare cases you may select the setting fence side. However, the rafter nail drill will be worn out faster.

When choosing the start position consider the strain on the operator when loading for example a large amount of 13 m beams 6/20 upright. There could be confusion during the pre-assembly of walls or the assembly of a roof structure in a case where the SPCP changed the through put direction for some of the parts but not for all. Therefore, the recommendation is to select the setting "Don't change". If there are work pieces left that are difficult to process after the part optimization is completed, highlight those and start the process again with the setting "unimportant" for these parts only. Parts which had their through put direction changed are marked with an "X" in the column "Type" and to avoid misunderstandings can be marked separately or after the processing is completed can be returned to their original position. It is also interesting to note the processing time for the job before the optimization process and to compare it to the value after optimization.

The forecasted processing time which is displayed after the optimization process can deviate from the actual processing time quite considerably. One of the main causes could be that processes that require a different tool from the one listed in the machine data are simply ignored. To ensure that the forecasted and actual processing times match, ensure that the office PC contains the tools that are needed for the majority of processing steps. If after the optimization

process parts are left that are marked with a red box in front of the part number, those have to be called up separately by pressing “enter” and dealt with manually.

Packaging

Nb	Part	Req.	Cut	Width	Height	Length	Unit	Gr	Comments	Profile
4	purlin	1	0	140	280	1700				
5	post	1	0	100	100	1600				
3	purlin	1	0	140	280	1000				
2	purlin	1	0	100	100	1000				
8	purlin	1	0	100	100	1000				
9	purlin	1	0	100	100	1000				
1	eaves lath	20	0	80	200	1000				
7	stand	1	0	100	100	700				
6	beam	1	0	80	200	300				

An important goal of CNC machining should be the efficient work flow during processing as well as on the construction side or during pre-fabrication in the work shop. How efficient is it to optimize the processing while at the same time the machine stops as the operator has to search for beams in various packages. The same goes for pre-fabrication and erecting the construction. It leads to dissatisfaction when the various groups have to look for parts because the packages have been put together without system but solely based on minimal waste during processing. You can optimize timbers of different jobs together to achieve an even more efficient optimization through the combination of various lengths.

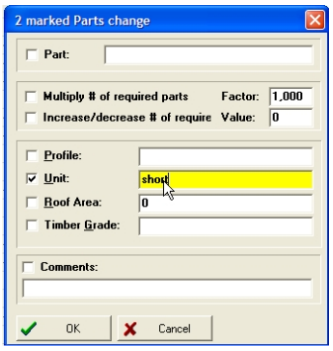

However, it makes more sense, to limit the length optimization to parts that will be used within one wall or roof segment that can be packaged together after completion. In order for the operator to be able to filter the parts during length optimization by packet the column “Packet” has to be labelled correctly. The labels that are provided by the SPCP automatically are very helpful, however, do not take the specific assembly requirements for roof constructions into consideration. All parts are assigned to the same roof structure and are labelled the same. During construction however, first the purlins and then the hip and valley rafters are needed. Those could be included in one or several packets. Short parts, that could be a problem if packaged together with long parts could be included in the same package independent of the roof structure.

One mouse click on the column „length“ will sort the parts. After that highlight the parts with the space bar until the desired length is reached and select → *Part* → *Change selected parts* which allows you to enter a description in the field “Packet” which can later be used by the operator to filter with the “?” key. The same process can be followed for parts which are not intended for a single roof structure. Use “Esc” to remove the highlighted section after changing the description otherwise the new name could be overwritten by mistake.

General Changes

A very efficient tool is the *Part → General changes for part* command which can be used to quickly correct errors e.g. tear out free processing. Markings which are barely visible after planing or due to a thick finish can be converted to a small V groove. The changes are only made for the parts that have been highlighted.